STYLE AUGMENTATION TO SOLVE OVER-FITTING ISSUE

Intro and Experiments · XU Chentianye

OUTLINE

This presentation is divided into 10 sections:

1. Challenge Statement
2. Problem Statement
3. BASIC IDEA: A First Look
4. BACKGROUND: Style Transfer
5. PROPOSED APPROACH: Style Transfer Pipeline
6. PROPOSED APPROACH: Randomization Procedure
7. Experiment Design
8. Experiment Result
9. Result Analysis
10. References

OUTLINE

This presentation is divided into 10 sections:

1. Challenge Statement ☜
2. Problem Statement
3. BASIC IDEA: A First Look
4. BACKGROUND: Style Transfer
5. PROPOSED APPROACH: Style Transfer Pipeline
6. PROPOSED APPROACH: Randomization Procedure
7. Experiment Design
8. Experiment Result
9. Result Analysis
10. References

Challenge Statement

COCO
Common Objects in Context

COCO Explorer

COCO 2017 train/val browser (123,287 images, 886,284 instances). Crowd labels not shown.

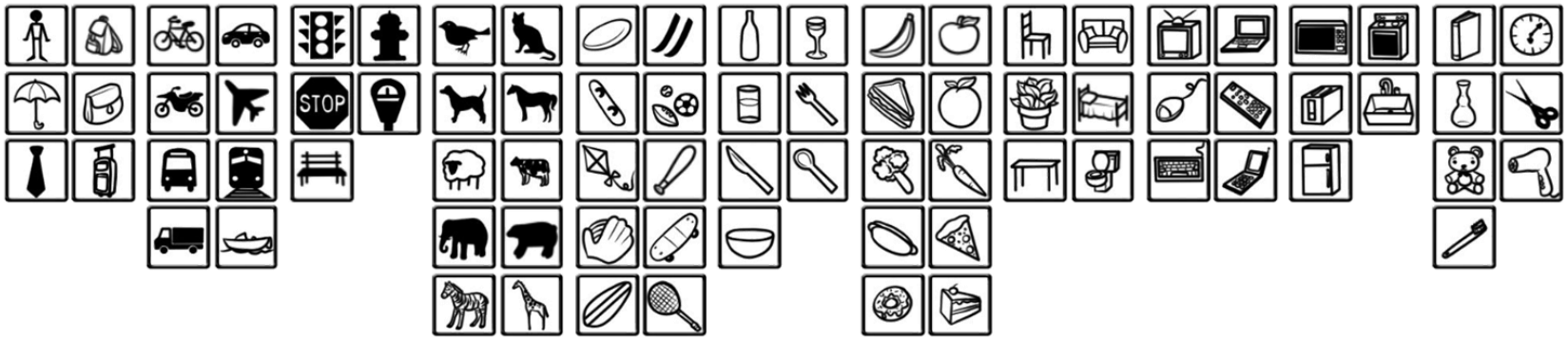

Lin, Tsung-Yi, et al. "Microsoft coco: Common objects in context." *European conference on computer vision*. Springer, Cham, 2014.

Challenge Statement

Lin, Tsung-Yi, et al. "Microsoft coco: Common objects in context." *European conference on computer vision*. Springer, Cham, 2014.

OUTLINE

This presentation is divided into 10 sections:

1. Challenge Statement
2. Problem Statement ☜
3. BASIC IDEA: A First Look
4. BACKGROUND: Style Transfer
5. PROPOSED APPROACH: Style Transfer Pipeline
6. PROPOSED APPROACH: Randomization Procedure
7. Experiment Design
8. Experiment Result
9. Result Analysis
10. References

Problem Statement

computer

person

bus

Pick out the target from the bounding boxes, and warped to **80-by-80 images with class labels**, and choose **2000 such images as training dataset** and **2000 as testing dataset**.

Use ResNet-50 as the base model. NNs are heavily reliant on big data to avoid overfitting.

Thus the limited amount of data promises overfitting.

Shorten, Connor, and Taghi M. Khoshgoftaar. "A survey on image data augmentation for deep learning." *Journal of big data* 6.1 (2019): 1-48.

OUTLINE

This presentation is divided into 10 sections:

1. Challenge Statement
2. Problem Statement
3. BASIC IDEA: A First Look ☜
4. BACKGROUND: Style Transfer
5. PROPOSED APPROACH: Style Transfer Pipeline
6. PROPOSED APPROACH: Randomization Procedure
7. Experiment Design
8. Experiment Result
9. Result Analysis
10. References

BASIC IDEA: A First Look

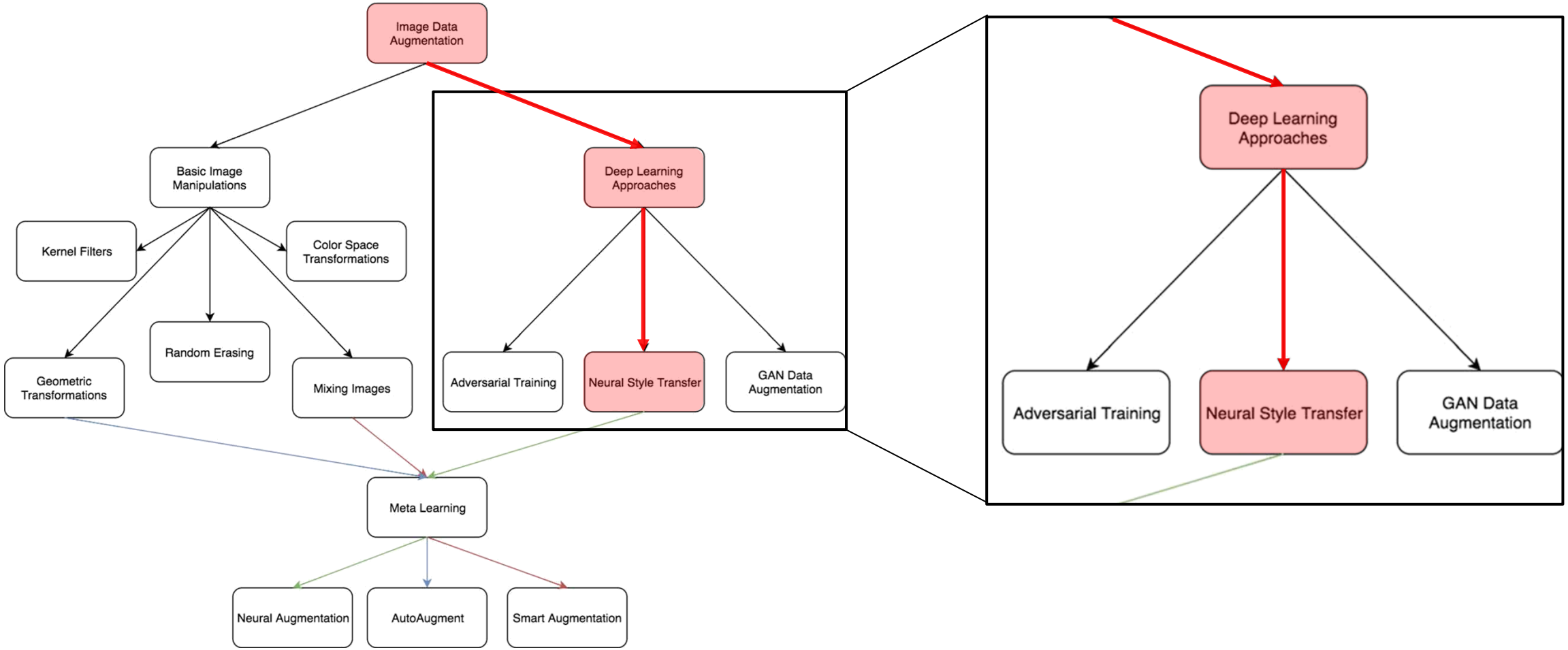

Shorten, Connor, and Taghi M. Khoshgoftaar. "A survey on image data augmentation for deep learning." *Journal of big data* 6.1 (2019): 1-48.

BASIC IDEA: A First Look

Style Augmentation: Data Augmentation via Style Randomization

Philip T. Jackson[1], Amir Atapour-Abarghouei[1], Stephen Bonner[1], Toby P. Breckon[1,2], Boguslaw Obara[1]
Department of Computer Science[1] - Department of Engineering[2]
Durham University, UK
{p.t.g.jackson,amir.atapour-abarghouei,s.a.r.bonner,toby.breckon,boguslaw.obara}@durham.ac.uk

Abstract

We introduce style augmentation, a new form of data augmentation based on random style transfer, for improving the robustness of Convolutional Neural Networks (CNN) over both classification and regression based tasks. During training, style augmentation randomizes texture, contrast and color, while preserving shape and semantic content. This is accomplished by adapting an arbitrary style transfer network to perform style randomization, by sampling target style embeddings from a multivariate normal distribution instead of computing them from a style image. In addition to standard classification experiments, we inves

flipping is a popular data augmentation technique [18], as it clearly does not change the corresponding class label. The most prevalent forms of image-based data augmentation include geometric distortions such as random cropping, zooming, rotation, flipping, linear intensity scaling and elastic deformation. Whilst these are successful at teaching rotation and scale invariance to a model, what of color, texture and complex illumination variations?

Tobin et al. [33] show that it is possible for an object detection model to generalize from graphically rendered virtual environments to the real world, by randomizing color, texture, illumination and other aspects of the virtual scene.

Jackson, Philip TG, et al. "Style augmentation: data augmentation via style randomization." *CVPR Workshops*. Vol. 6. 2019.

BASIC IDEA: A First Look

Jackson, Philip TG, et al. "Style augmentation: data augmentation via style randomization." *CVPR Workshops*. Vol. 6. 2019.

OUTLINE

This presentation is divided into 10 sections:

1. Challenge Statement
2. Problem Statement
3. BASIC IDEA: A First Look
4. BACKGROUND: Style Transfer ☜
5. PROPOSED APPROACH: Style Transfer Pipeline
6. PROPOSED APPROACH: Randomization Procedure
7. Experiment Design
8. Experiment Result
9. Result Analysis
10. References

BACKGROUND: Style Transfer

Gatys, Leon A., Alexander S. Ecker, and Matthias Bethge. "Image style transfer using convolutional neural networks." *Proceedings of the IEEE conference on computer vision and pattern recognition*. 2016.

BACKGROUND: Style Transfer

1. Single-Content-Single-Style Model
2. Multi-Content-Single-Style Model
3. Multi-Content-Multi-Style Model

Gatys, Leon A., Alexander S. Ecker, and Matthias Bethge. "Image style transfer using convolutional neural networks." *Proceedings of the IEEE conference on computer vision and pattern recognition*. 2016.

BACKGROUND: Style Transfer
Single-Content-Single-Style Model

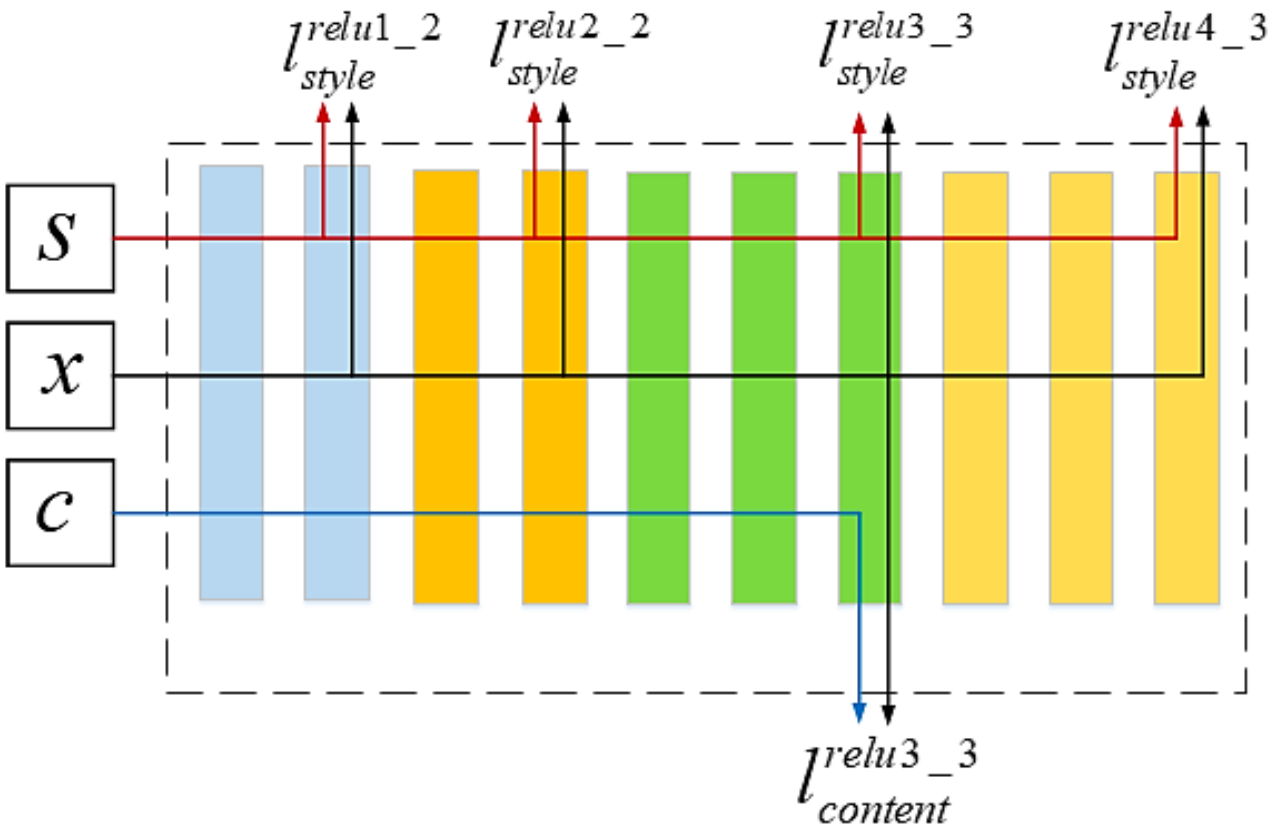

Gatys, Leon A., Alexander S. Ecker, and Matthias Bethge. "Image style transfer using convolutional neural networks." *Proceedings of the IEEE conference on computer vision and pattern recognition*. 2016.

BACKGROUND: Style Transfer
Single-Content-Single-Style Model

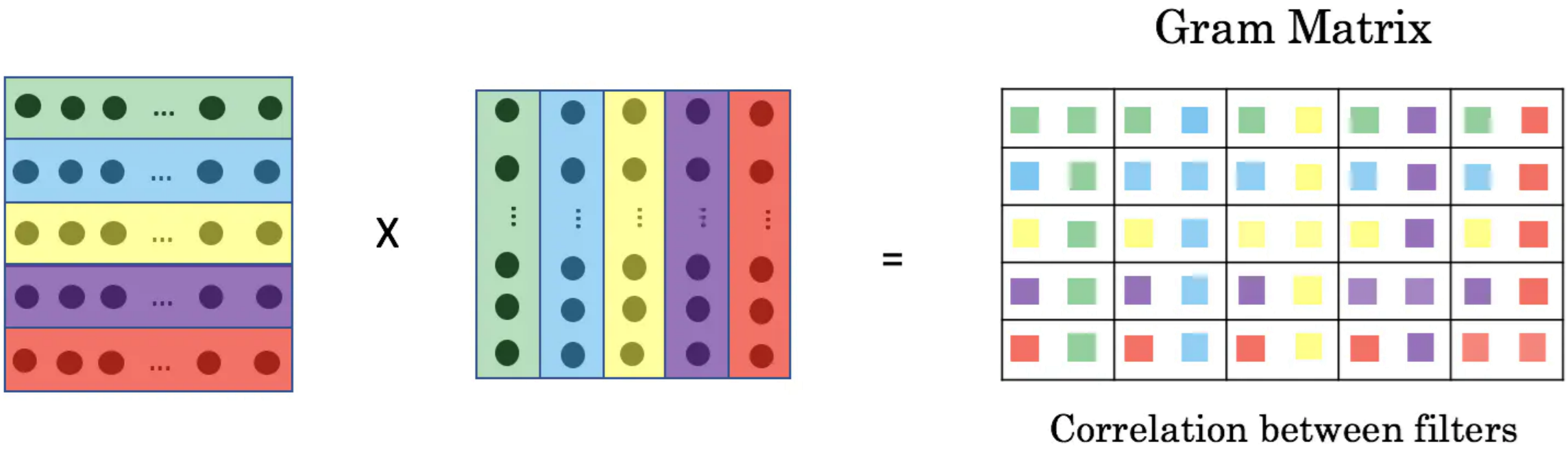

Gatys, Leon A., Alexander S. Ecker, and Matthias Bethge. "Image style transfer using convolutional neural networks." *Proceedings of the IEEE conference on computer vision and pattern recognition*. 2016.

BACKGROUND: Style Transfer
Single-Content-Single-Style Model

Style Loss:

$$l_{style}^{i}(x,s) = \frac{1}{n}\left\| G\left[f_i(x) \right] - G\left[f_i(s) \right] \right\|$$

$$L_s(x,s) = \sum_{i \in S} l_{style}^{i}(x,s)$$

Gatys, Leon A., Alexander S. Ecker, and Matthias Bethge. "Image style transfer using convolutional neural networks." *Proceedings of the IEEE conference on computer vision and pattern recognition*. 2016.

BACKGROUND: Style Transfer
Single-Content-Single-Style Model

Content Loss:

$$l_{content}^{j}(x,c) = \frac{1}{n_j}\left\| G\left[f_j(x) \right] - G\left[f_j(c) \right] \right\|$$

$$L_c(x,c) = \sum_{j \in C} l_{content}^{j}(x,c)$$

Gatys, Leon A., Alexander S. Ecker, and Matthias Bethge. "Image style transfer using convolutional neural networks." *Proceedings of the IEEE conference on computer vision and pattern recognition*. 2016.

BACKGROUND: Style Transfer
Single-Content-Single-Style Model

Total Loss:

$$\min_{x} L_c(x,c) + \lambda_s L_s(x,s)$$

Gatys, Leon A., Alexander S. Ecker, and Matthias Bethge. "Image style transfer using convolutional neural networks." *Proceedings of the IEEE conference on computer vision and pattern recognition*. 2016.

BACKGROUND: Style Transfer
Multi-Content-Single-Style Model

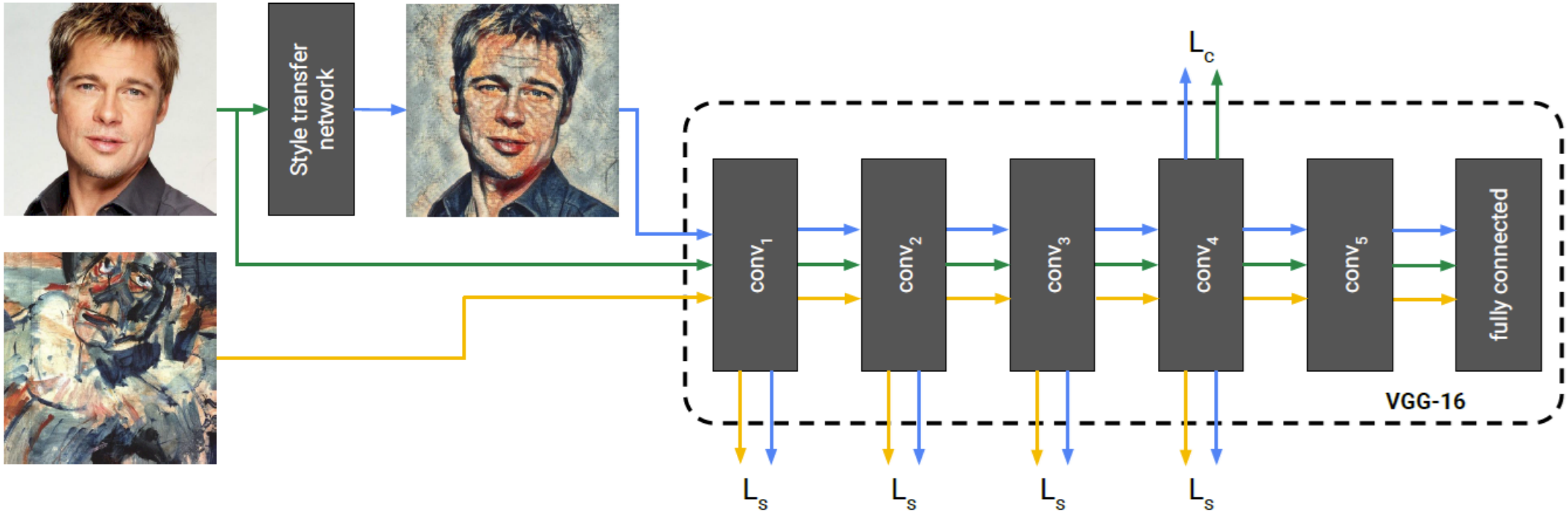

Dumoulin, Vincent, Jonathon Shlens, and Manjunath Kudlur. "A learned representation for artistic style." *arXiv preprint arXiv:1610.07629* (2016).

BACKGROUND: Style Transfer
Multi-Content-Single-Style Model

$$z = \gamma_s \odot \left(\frac{x - \mu}{\sigma} \right) + \beta_s$$

Dumoulin, Vincent, Jonathon Shlens, and Manjunath Kudlur. "A learned representation for artistic style." *arXiv preprint arXiv:1610.07629* (2016).

BACKGROUND: Style Transfer
Multi-Content-Multi-Style Model

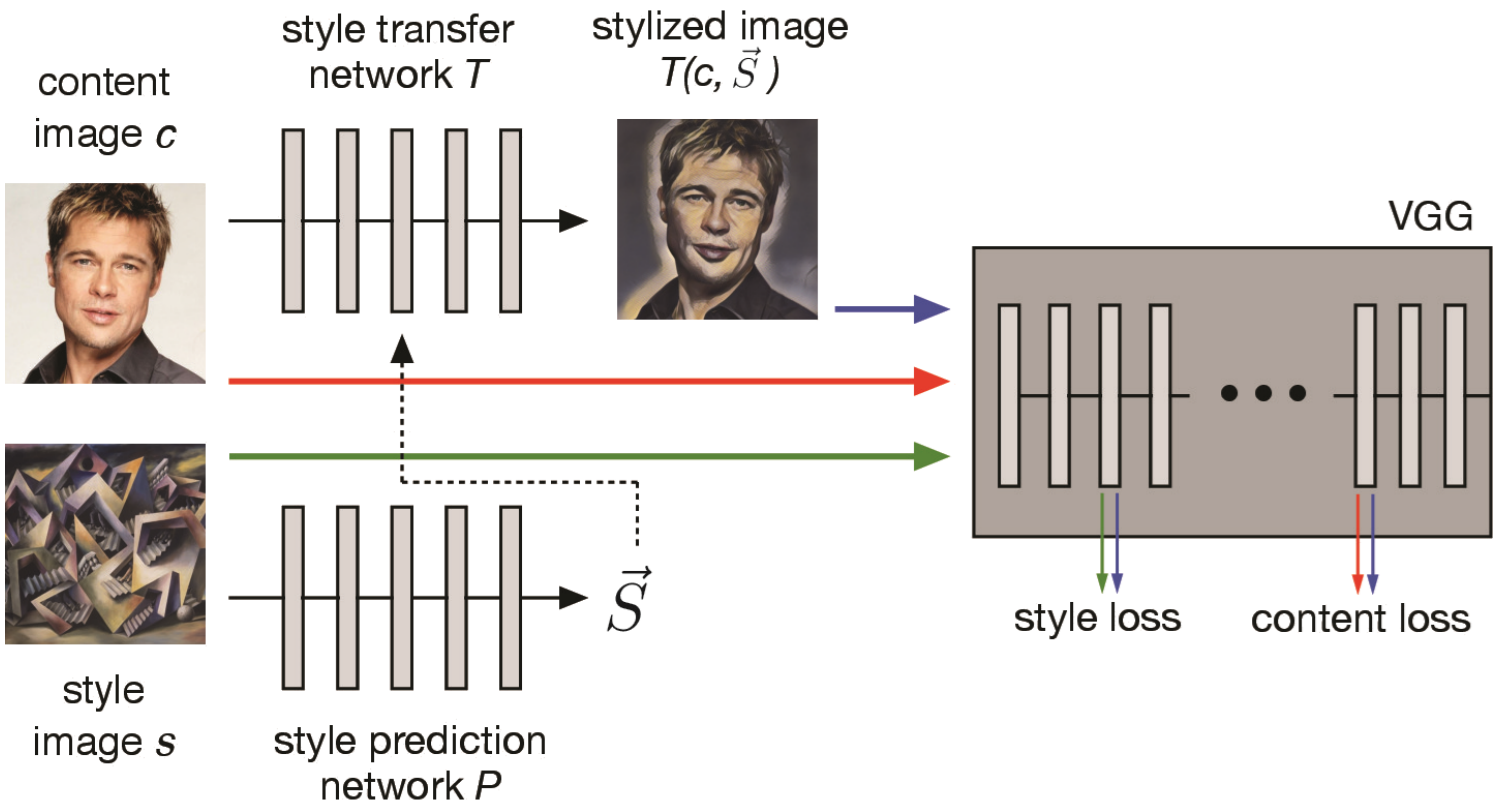

Ghiasi, Golnaz, et al. "Exploring the structure of a real-time, arbitrary neural artistic stylization network." *arXiv preprint arXiv:1705.06830* (2017).

BACKGROUND: Style Transfer
Multi-Content-Multi-Style Model

Operation	Kernel size	Stride	Feature maps	Padding	Nonlinearity
Network – $256 \times 256 \times 3$ input					
Convolution	9	1	32	SAME	ReLU
Convolution	3	2	64	SAME	ReLU
Convolution	3	2	128	SAME	ReLU
Residual block			128		
Residual block			128		
Residual block			128		
Residual block			128		
Residual block			128		
Upsampling			64		
Upsampling			32		
Convolution	9	1	3	SAME	Sigmoid

13 BN layers, so 13 γ and 13 β

Ghiasi, Golnaz, et al. "Exploring the structure of a real-time, arbitrary neural artistic stylization network." *arXiv preprint arXiv:1705.06830* (2017).

OUTLINE

This presentation is divided into 10 sections:

1. Challenge Statement
2. Problem Statement
3. BASIC IDEA: A First Look
4. BACKGROUND: Style Transfer
5. PROPOSED APPROACH: Style Transfer Pipeline ☜
6. PROPOSED APPROACH: Randomization Procedure
7. Experiment Design
8. Experiment Result
9. Result Analysis
10. References

PROPOSED APPROACH: Style Transfer Pipeline

Style Augmentation: Data Augmentation via Style Randomization

Philip T. Jackson[1], Amir Atapour-Abarghouei[1], Stephen Bonner[1], Toby P. Breckon[1,2], Boguslaw Obara[1]
Department of Computer Science[1] - Department of Engineering[2]
Durham University, UK
{p.t.g.jackson,amir.atapour-abarghouei,s.a.r.bonner,toby.breckon,boguslaw.obara}@durham.ac.uk

Abstract

We introduce style augmentation, a new form of data augmentation based on random style transfer, for improving the robustness of Convolutional Neural Networks (CNN) over both classification and regression based tasks. During training, style augmentation randomizes texture, contrast and color, while preserving shape and semantic content. This is accomplished by adapting an arbitrary style transfer network to perform style randomization, by sampling target style embeddings from a multivariate normal distribution instead of computing them from a style image. In addition to standard classification experiments, we inves

flipping is a popular data augmentation technique [18], as it clearly does not change the corresponding class label. The most prevalent forms of image-based data augmentation include geometric distortions such as random cropping, zooming, rotation, flipping, linear intensity scaling and elastic deformation. Whilst these are successful at teaching rotation and scale invariance to a model, what of color, texture and complex illumination variations?

Tobin et al. [33] show that it is possible for an object detection model to generalize from graphically rendered virtual environments to the real world, by randomizing color, texture, illumination and other aspects of the virtual scene.

Jackson, Philip TG, et al. "Style augmentation: data augmentation via style randomization." *CVPR Workshops*. Vol. 6. 2019.

PROPOSED APPROACH: Style Transfer Pipeline

Which style transfer model should we use?

1. Fast
2. Capable of applying as broad a range of styles

Jackson, Philip TG, et al. "Style augmentation: data augmentation via style randomization." *CVPR Workshops*. Vol. 6. 2019.

PROPOSED APPROACH: Style Transfer Pipeline

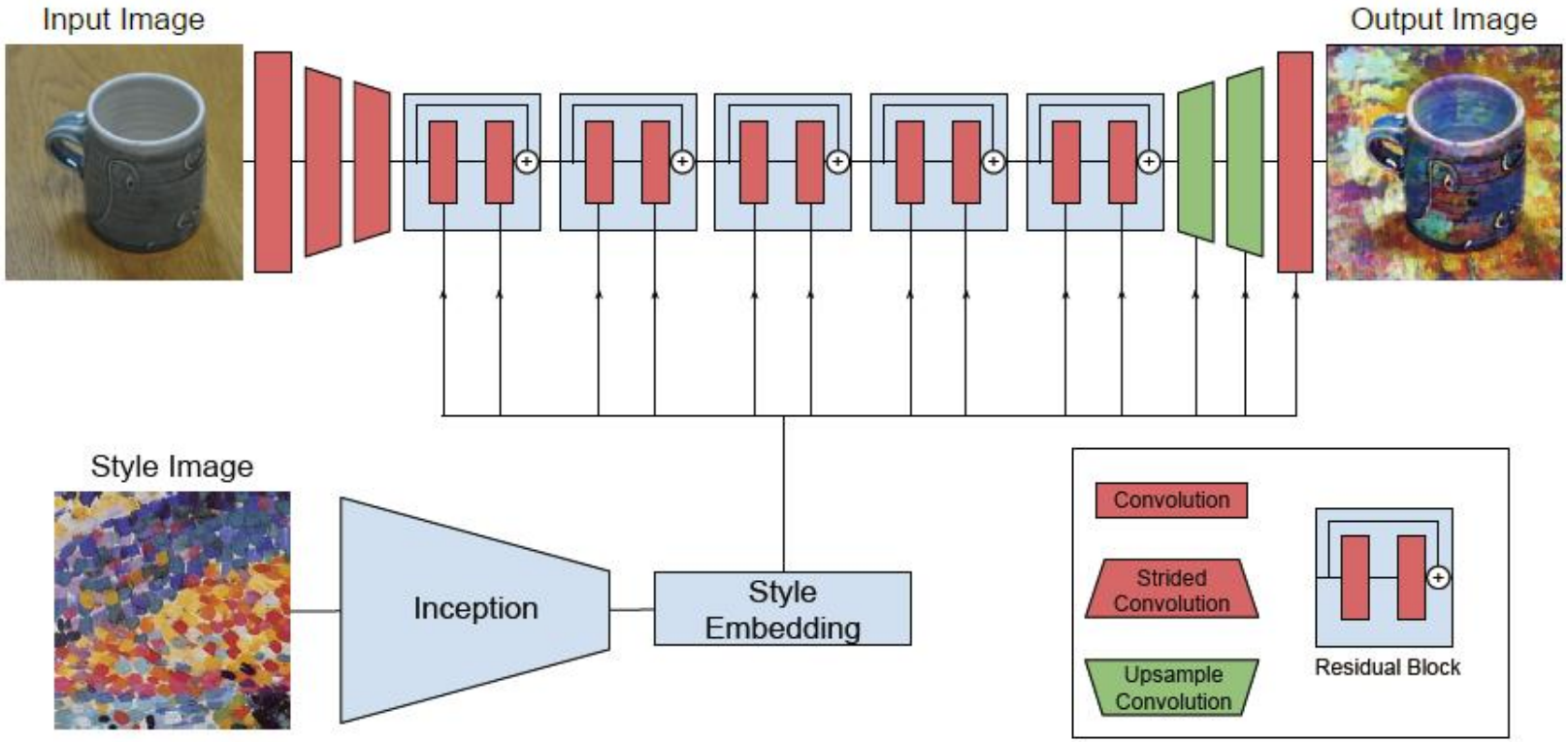

Jackson, Philip TG, et al. "Style augmentation: data augmentation via style randomization." *CVPR Workshops*. Vol. 6. 2019.

PROPOSED APPROACH: Style Transfer Pipeline

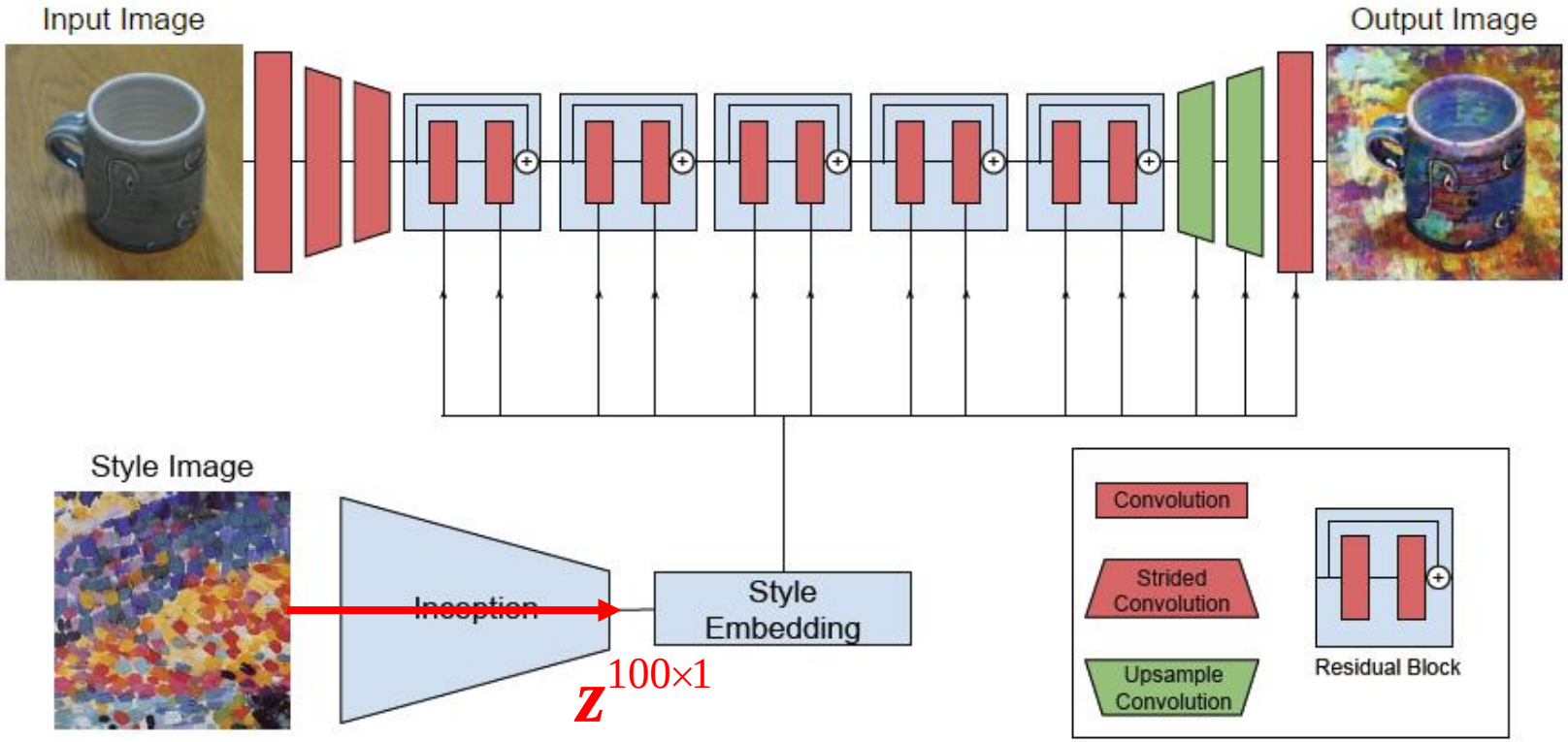

Jackson, Philip TG, et al. "Style augmentation: data augmentation via style randomization." *CVPR Workshops*. Vol. 6. 2019.

PROPOSED APPROACH: Style Transfer Pipeline

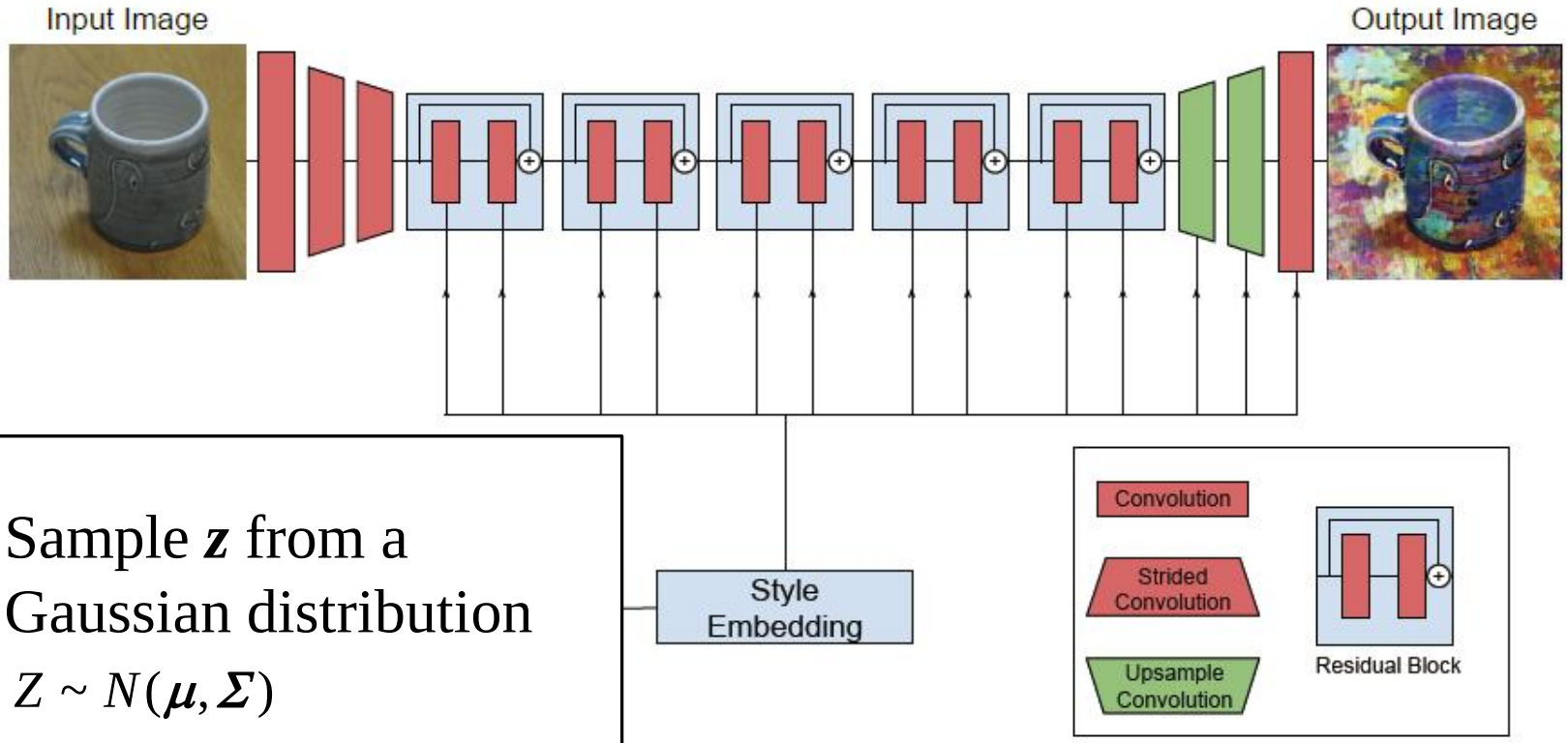

Sample $\boldsymbol{z}$ from a Gaussian distribution

$Z \sim N(\boldsymbol{\mu}, \boldsymbol{\Sigma})$

Jackson, Philip TG, et al. "Style augmentation: data augmentation via style randomization." *CVPR Workshops*. Vol. 6. 2019.

OUTLINE

This presentation is divided into 10 sections:

1. Challenge Statement
2. Problem Statement
3. BASIC IDEA: A First Look
4. BACKGROUND: Style Transfer
5. PROPOSED APPROACH: Style Transfer Pipeline
6. PROPOSED APPROACH: Randomization Procedure ☜
7. Experiment Design
8. Experiment Result
9. Result Analysis
10. References

PROPOSED APPROACH: Randomization Procedure

Original α=0.0 α=0.2 α=0.4 α=0.6 α=0.8 α=1.0

$$\boldsymbol{z} = \alpha N(\boldsymbol{\mu}, \boldsymbol{\Sigma}) + (1-\alpha)P(\boldsymbol{c})$$

where P is the style predictor network,

$$\boldsymbol{\mu} = \boldsymbol{E}_{\boldsymbol{s}}[P(\boldsymbol{s})],$$

$$\boldsymbol{\Sigma}_{i,j} = \mathrm{Cov}[P(\boldsymbol{s})_i, P(\boldsymbol{s})_j].$$

Jackson, Philip TG, et al. "Style augmentation: data augmentation via style randomization." *CVPR Workshops*. Vol. 6. 2019.

OUTLINE

This presentation is divided into 10 sections:

1. Challenge Statement
2. Problem Statement
3. BASIC IDEA: A First Look
4. BACKGROUND: Style Transfer
5. PROPOSED APPROACH: Style Transfer Pipeline
6. PROPOSED APPROACH: Randomization Procedure
7. Experiment Design ☜
8. Experiment Result
9. Result Analysis
10. References

Experiment Design

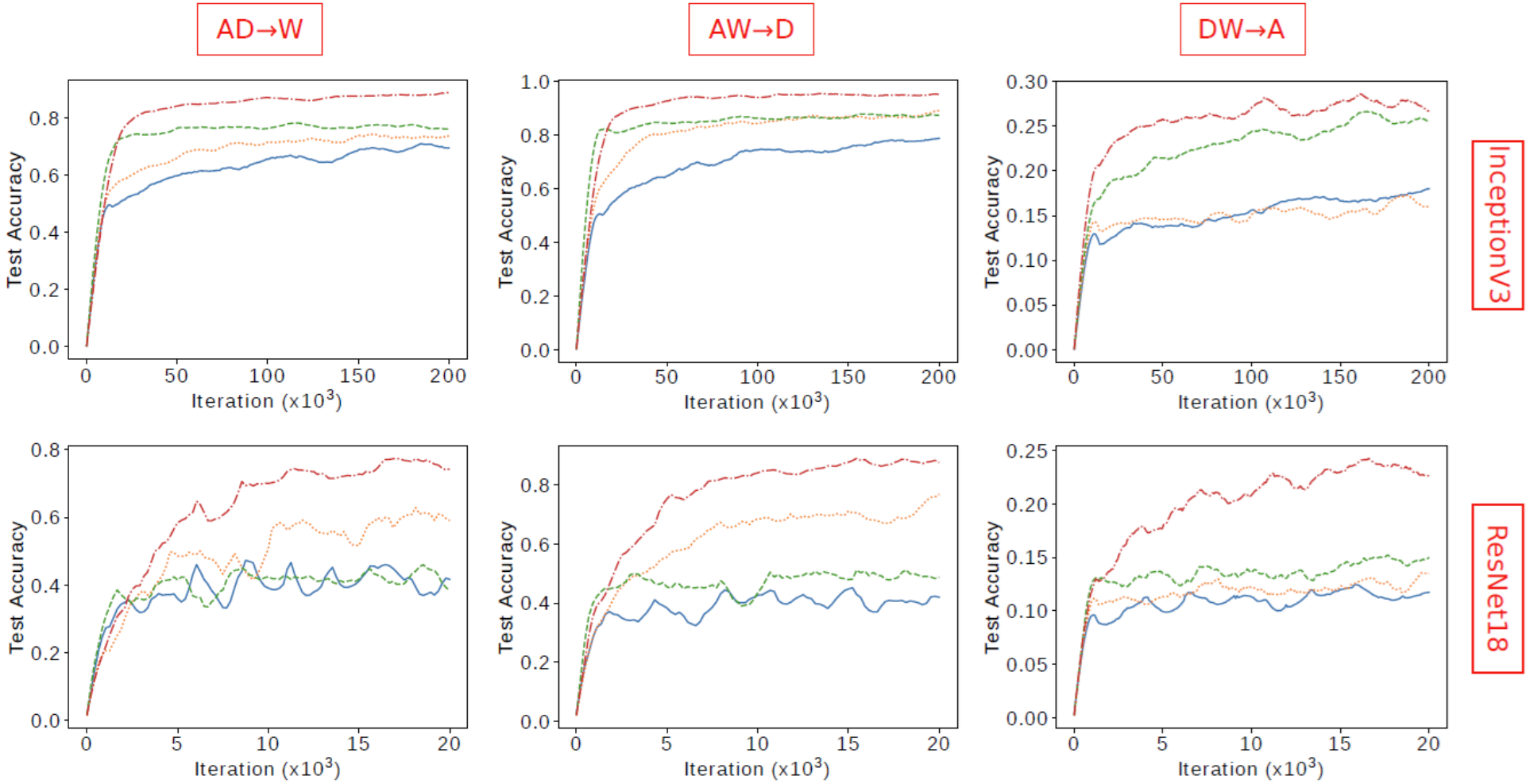

Jackson, Philip TG, et al. "Style augmentation: data augmentation via style randomization." *CVPR Workshops*. Vol. 6. 2019.

Experiment Design

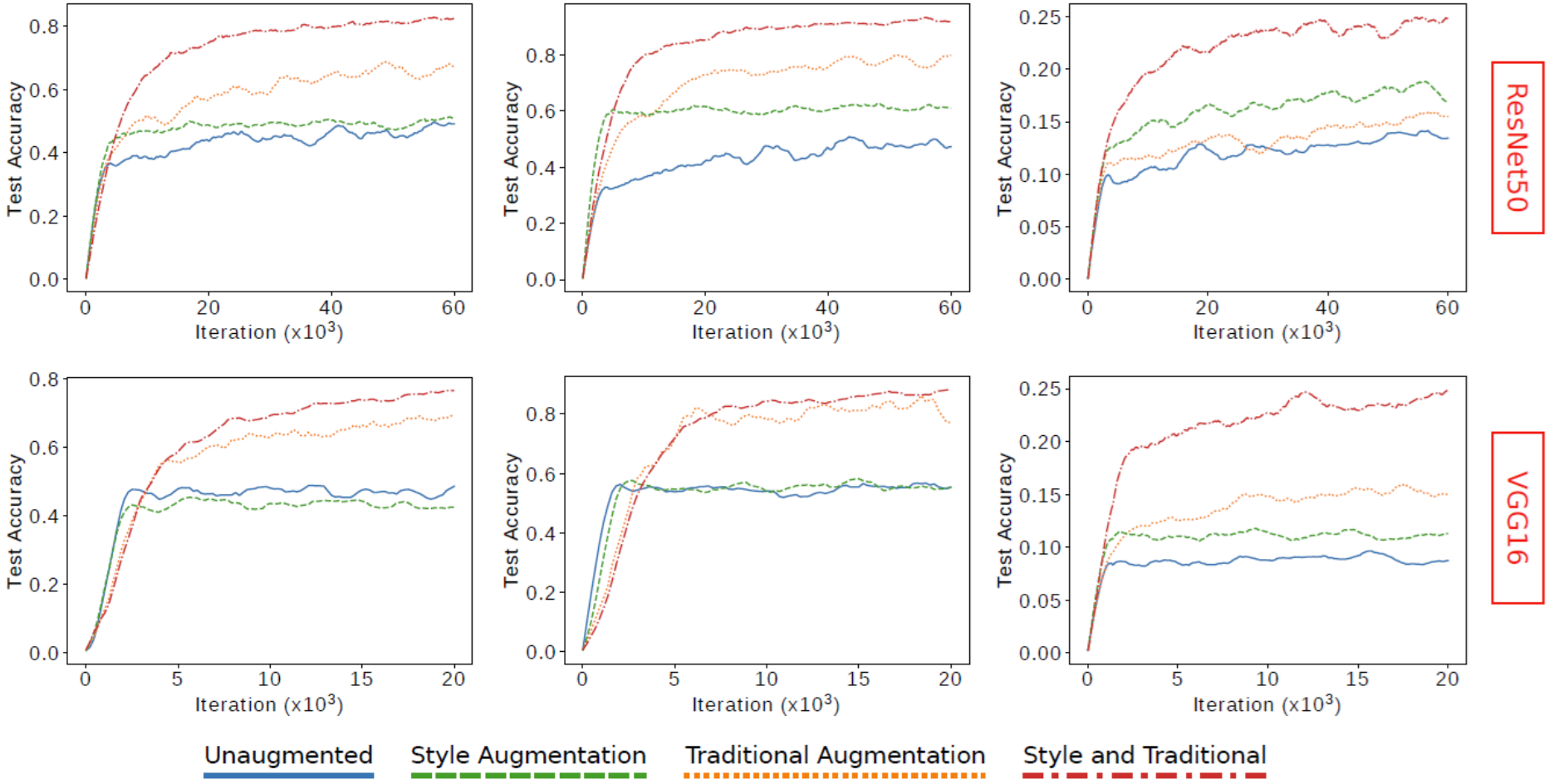

Jackson, Philip TG, et al. "Style augmentation: data augmentation via style randomization." *CVPR Workshops*. Vol. 6. 2019.

EXPERIMENT DESIGN: Data

MS COCO 2017 Dataset

COCO
Common Objects in Context

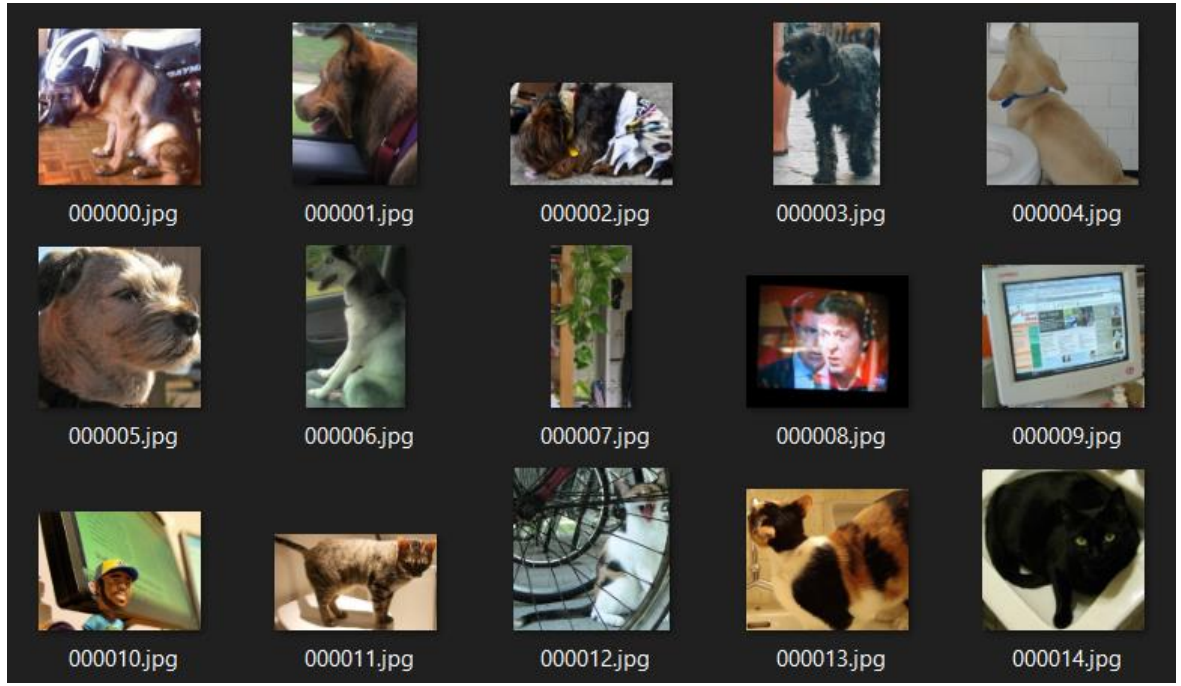


```
if(find_object_dict[i]['iscrowd'] == 0 and find_object_dict[i]['bbox'][2]*find_object_dict[i]['bbox'][3] >= 45000):
    x, y, width, height = find_object_dict[i]['bbox']
    img = img[round(y):round(y)+round(height), round(x):round(x)+round(width)]  # to pick the region of object
    file_name = save_path + str(ind).zfill(6) + '.jpg'
    ind += 1
    cv.imwrite(file_name, img)
    category_ID = find_object_dict[i]['category_id']
    class_list.append(categories_dict[category_ID])
```

110961 Training Set Samples
& 4677 Validation Set Samples
(80 classes totally)

EXPERIMENT DESIGN: Data

MS COCO 2017 Dataset

```python
path_class_name_convert = r'C:\Users\xcty0\Desktop\style_augmentation_exp\coco_classification\class_name_convert.csv'
class Modified_COCO(data.Dataset):
    def __init__(self, data_path, label_path):  # 载入数据
        self.pd_convert = pd.read_csv(path_class_name_convert)
        self.temp_convert_dict = dict(self.pd_convert.values.tolist())
        self.convert_dict = dict(zip(self.temp_convert_dict.values(), self.temp_convert_dict.keys()))

        self.images = [data_path + '/' + f for f in os.listdir(data_path) if f.endswith('.jpg')]
        self.images = sorted(self.images)

        self.csv = pd.read_csv(label_path)['name'].values.tolist()
        self._len = len(self.images)
        # check len
        if(len(self.images)!=len(self.csv)):
            print("Error! The length of images and masks don't match!",len(self.images), len(self.csv))
        self.img_transform = transforms.Compose([
            transforms.Resize((128, 128), interpolation=InterpolationMode.BICUBIC),  # bicubic interpolation algorithm
            transforms.ToTensor(),
            transforms.Normalize((0.5,0.5,0.5),(0.5,0.5,0.5))
            ])
```

Experiment Design: without augmentation

COCO 2017

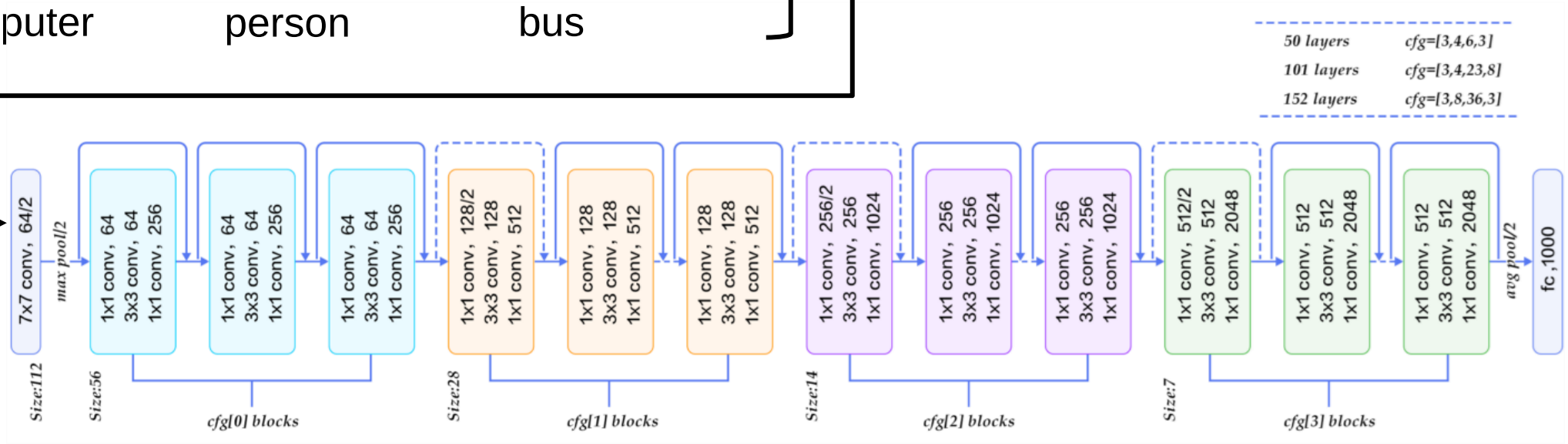

Jackson, Philip TG, et al. "Style augmentation: data augmentation via style randomization." *CVPR Workshops*. Vol. 6. 2019.

Experiment Design: with Traditional Augmentation

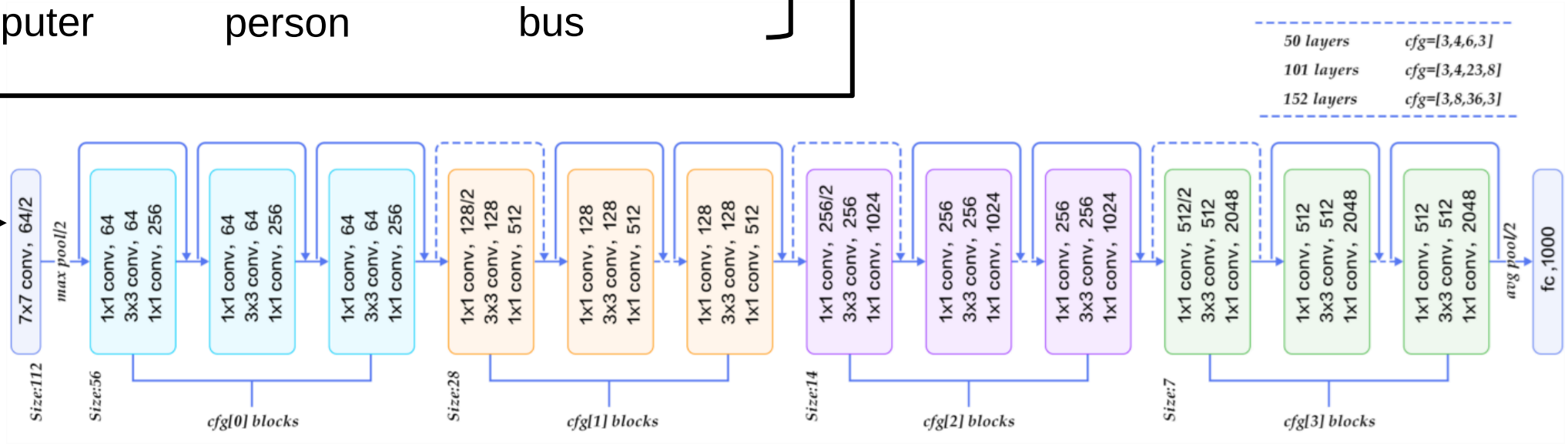

Jackson, Philip TG, et al. "Style augmentation: data augmentation via style randomization." *CVPR Workshops*. Vol. 6. 2019.

EXPERIMENT DESIGN: Comparison Test 2

Traditional Online Augmentation We Employ.

1. Vertical & Horizontal flipping
2. Rotations (randomly from 0 to 180 degrees)
3. Scaling (range from 0.6 to 1.3)
4. Random cropping
5. Sharpening
6. Adjustments of color distributions (brightness, contrast, saturation, chroma of images)

Jackson, Philip TG, et al. "Style augmentation: data augmentation via style randomization." *CVPR Workshops*. Vol. 6. 2019.

Experiment Design: with Style Augmentation

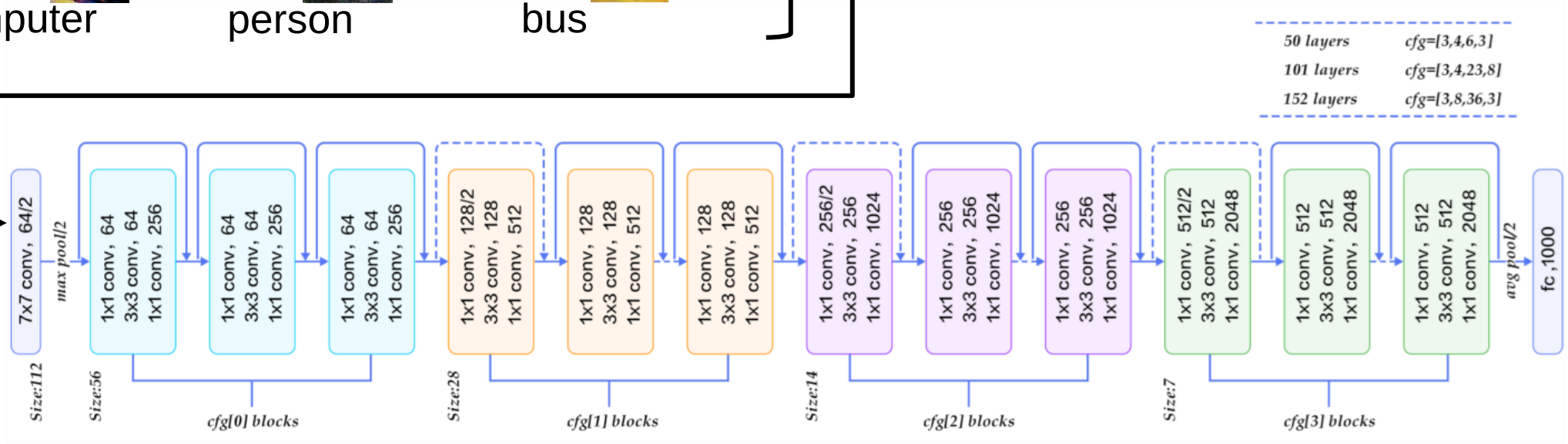

Jackson, Philip TG, et al. "Style augmentation: data augmentation via style randomization." *CVPR Workshops*. Vol. 6. 2019.

EXPERIMENT DESIGN: Comparison Test 3

```python
def __getitem__(self, item):  # 返回相应位置的数据 & 标签
    # return self._x[item], self._y[item]
    image_pa = self.images[item]
    img = cv.imread(image_pa)

    seed = np.random.randint(2147483647)
    random.seed(seed)
    img = Image.fromarray(img)

    img = toTensor(img).unsqueeze(0)
    img = img.to('cuda:0' if torch.cuda.is_available() else 'cpu')
    img = style_augmentor(img)
    img = img[0,:,:,:]
```

Jackson, Philip TG, et al. "Style *augmentation: data augmentation via style randomization." CVPR Workshops. Vol*. 6. 2019.

Experiment Design: with both Traditional & Style Augmentation

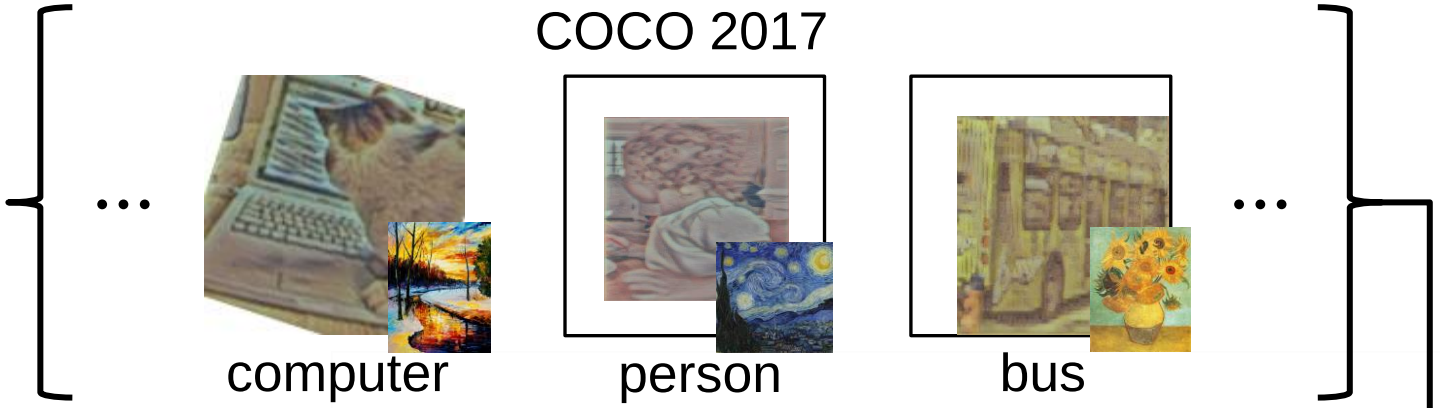

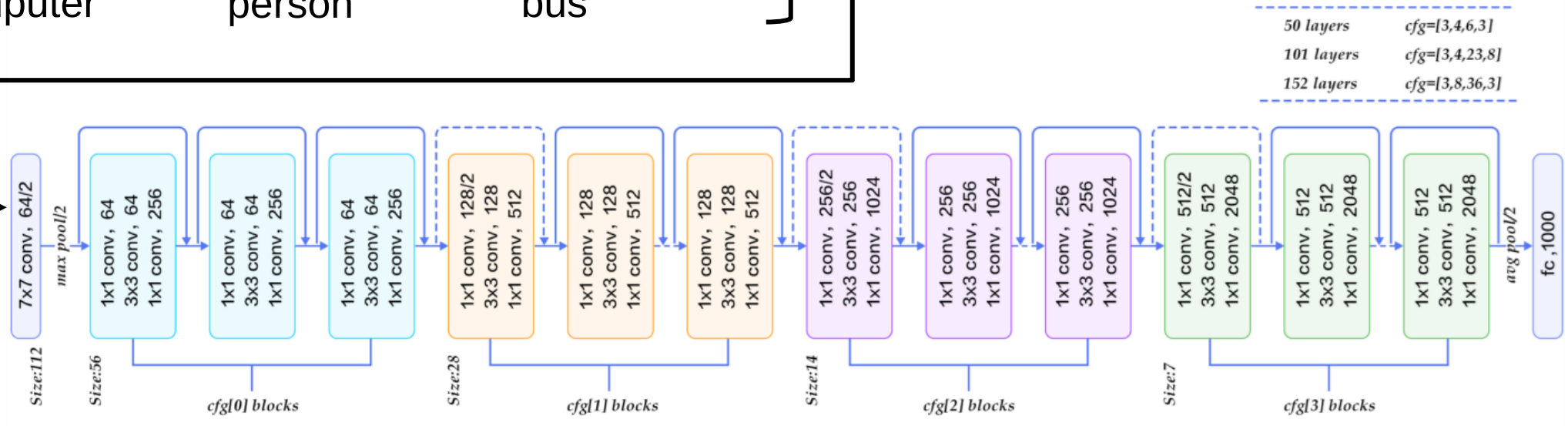

Jackson, Philip TG, et al. "Style augmentation: data augmentation via style randomization." *CVPR Workshops*. Vol. 6. 2019.

EXPERIMENT DESIGN: Comparison Test 4

```python
def __getitem__(self, item):  # 返回相应位置的数据 & 标签
    # return self._x[item], self._y[item]
    image_pa = self.images[item]
    img = cv.imread(image_pa)

    seed = np.random.randint(2147483647)
    random.seed(seed)
    img = Image.fromarray(img)

    img = toTensor(img).unsqueeze(0)
    img = img.to('cuda:0' if torch.cuda.is_available() else 'cpu')
    img = style_augmentor(img)
    img = img[0,:,:,:]

    img = self.augmentation(img)
    img = self.img_transform(img)
    img = np.array(img)
    image = torch.from_numpy(img)

    label = self.convert_dict[self.csv[item]]

    return image, label
```

Jackson, Philip TG, et al. "Style *augmentation: data augmentation via style randomization." CVPR Workshops. Vol*. 6. 2019.

EXPERIMENT DESIGN: Training Hyperparameters

Training Setting

Epoch: 50 (with early stopping mechanism)

Batch Size: 64

Loss Function: Cross Entropy Loss

Optimizer: Adam

Learning Rate: 0.001

OUTLINE

This presentation is divided into 10 sections:

1. Challenge Statement
2. Problem Statement
3. BASIC IDEA: A First Look
4. BACKGROUND: Style Transfer
5. PROPOSED APPROACH: Style Transfer Pipeline
6. PROPOSED APPROACH: Randomization Procedure
7. Experiment Design
8. Experiment Result ☜
9. Result Analysis
10. References

Experiment Result

Comparison Test 1: ResNet-50 without any augmentation

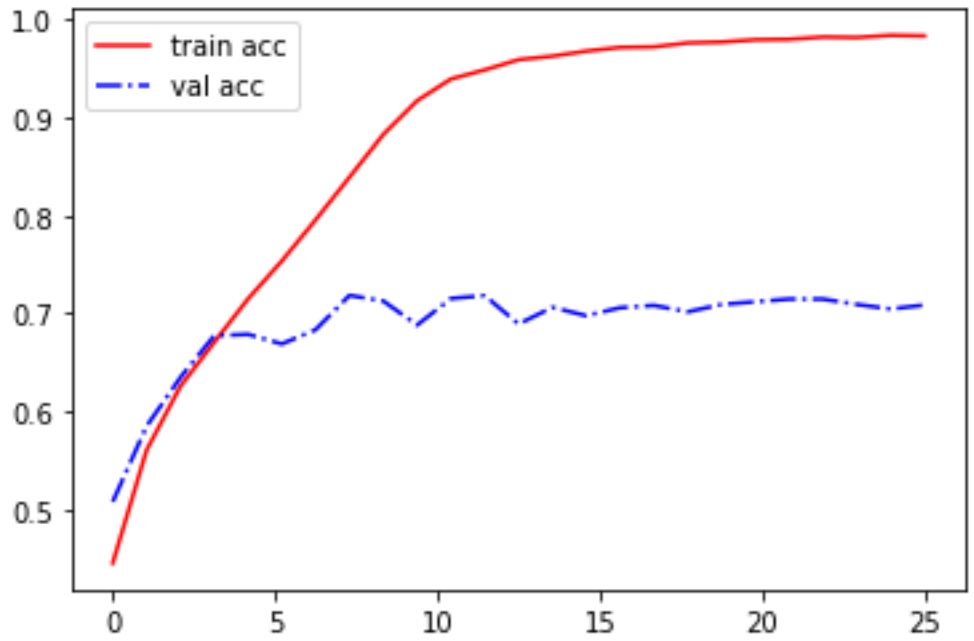

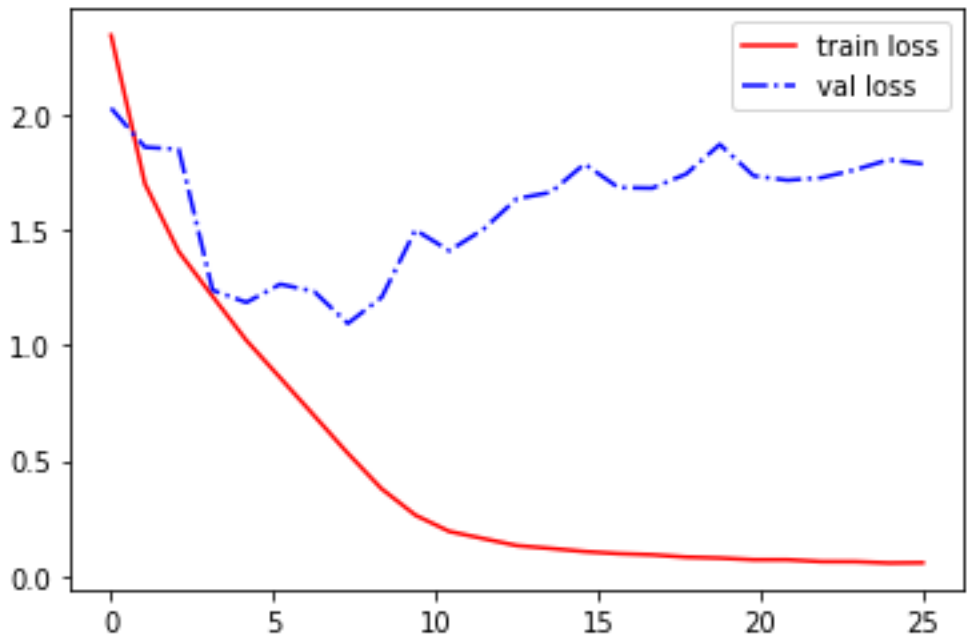

Experiment Result

Comparison Test 1: ResNet-50 without any augmentation

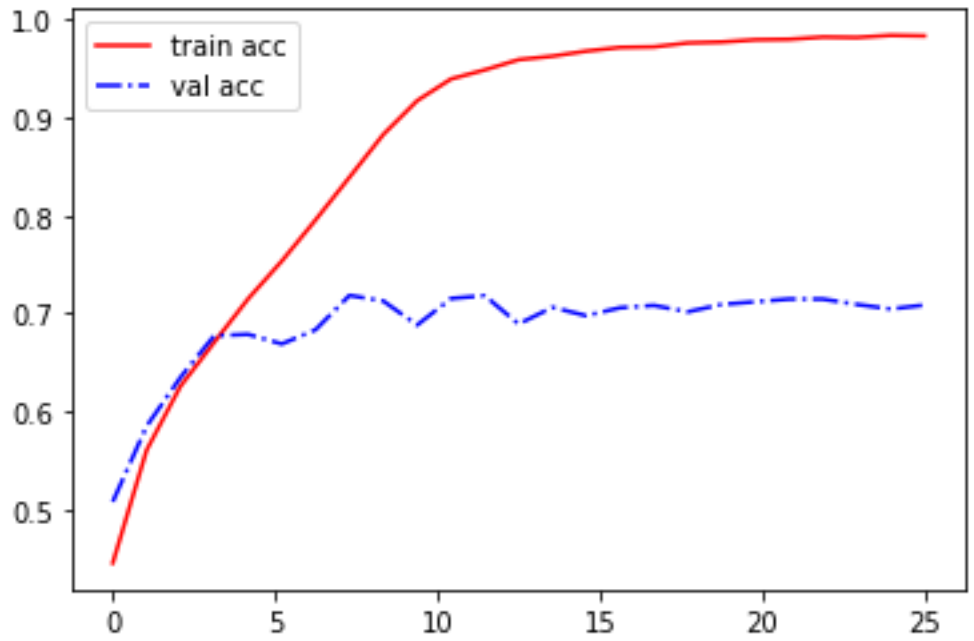

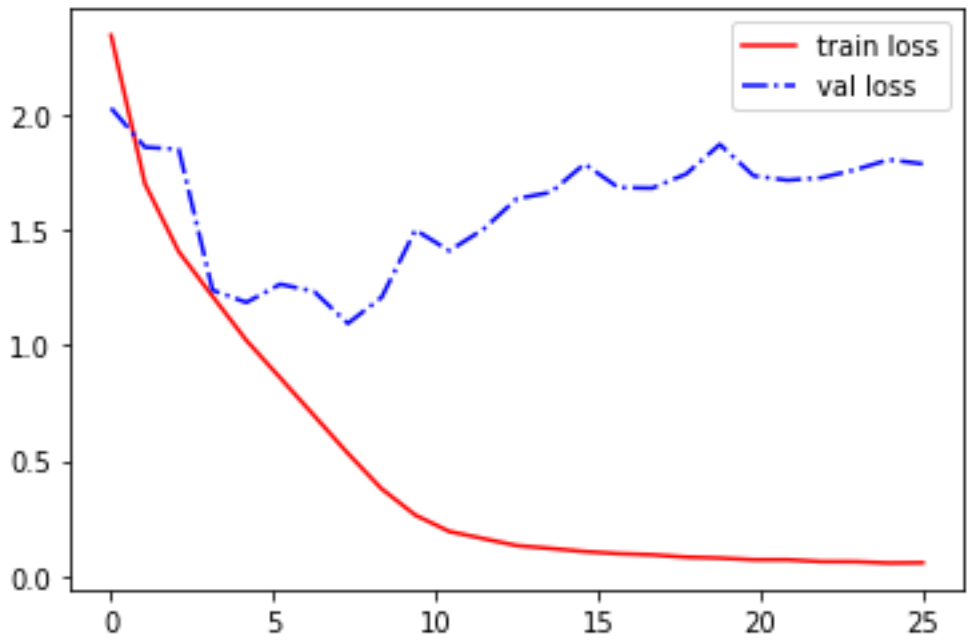

Experiment Result

Comparison Test 2: ResNet-50 with Traditional Augmentation

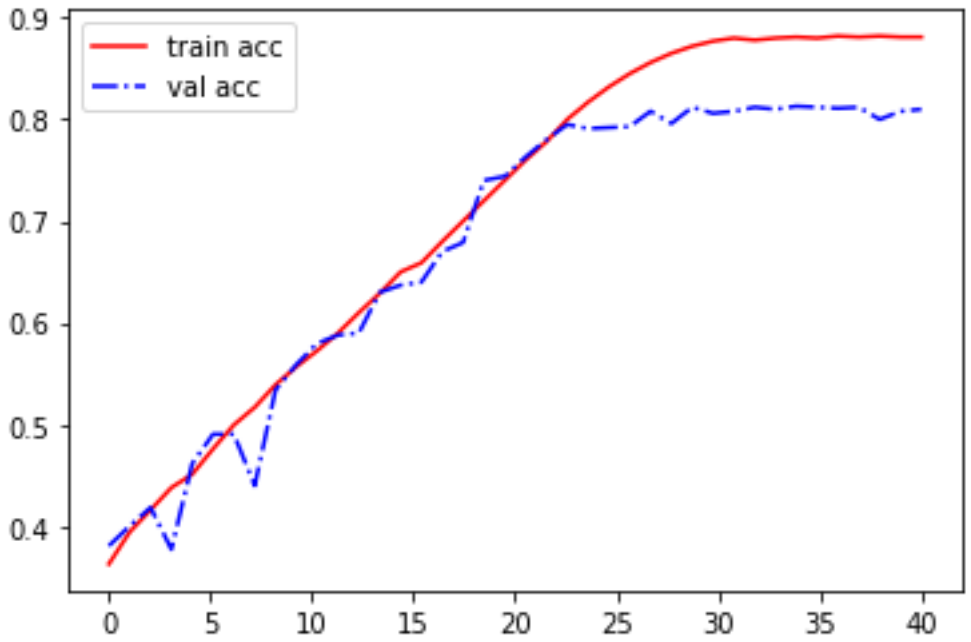

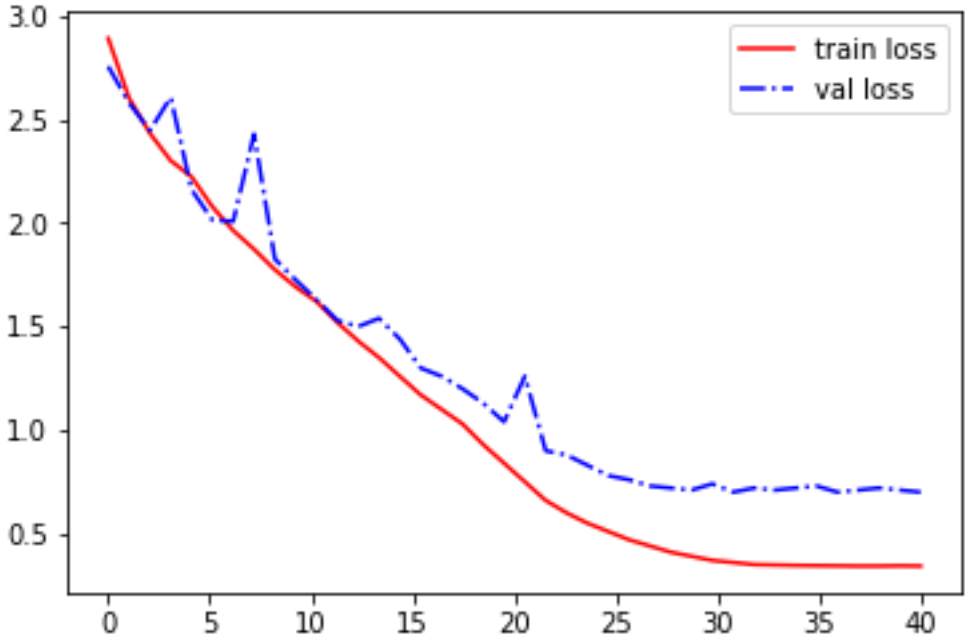

Experiment Result

Comparison Test 3: ResNet-50 with Style Augmentation

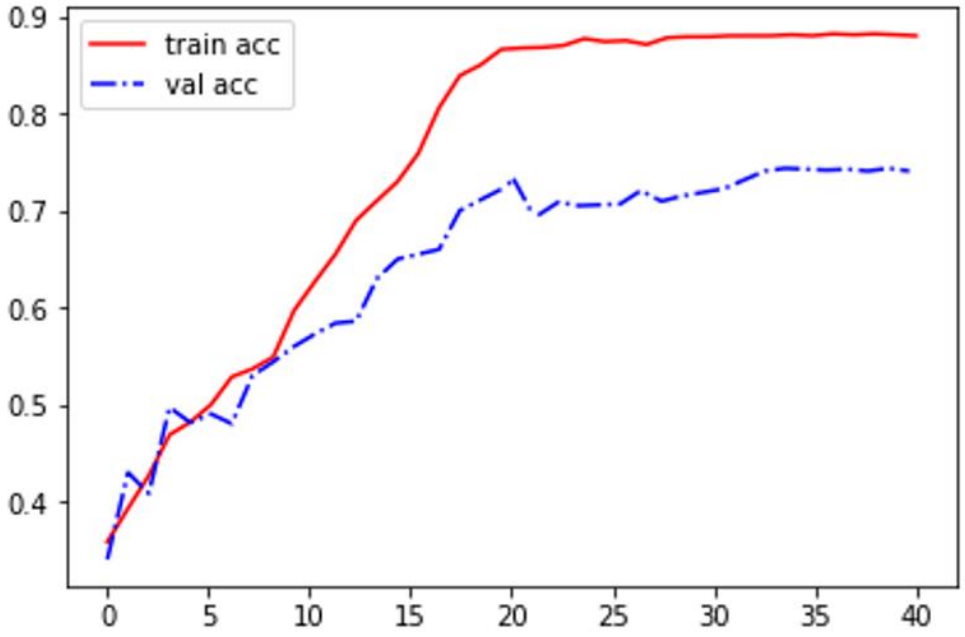

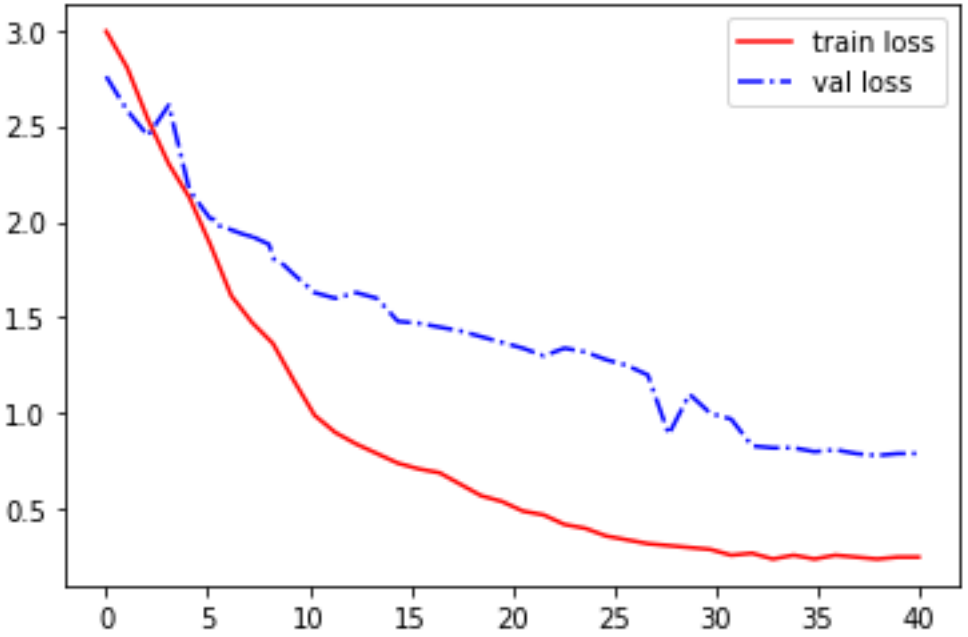

Experiment Result

Comparison Test 4: ResNet-50 with both Traditional and Style Augmentation

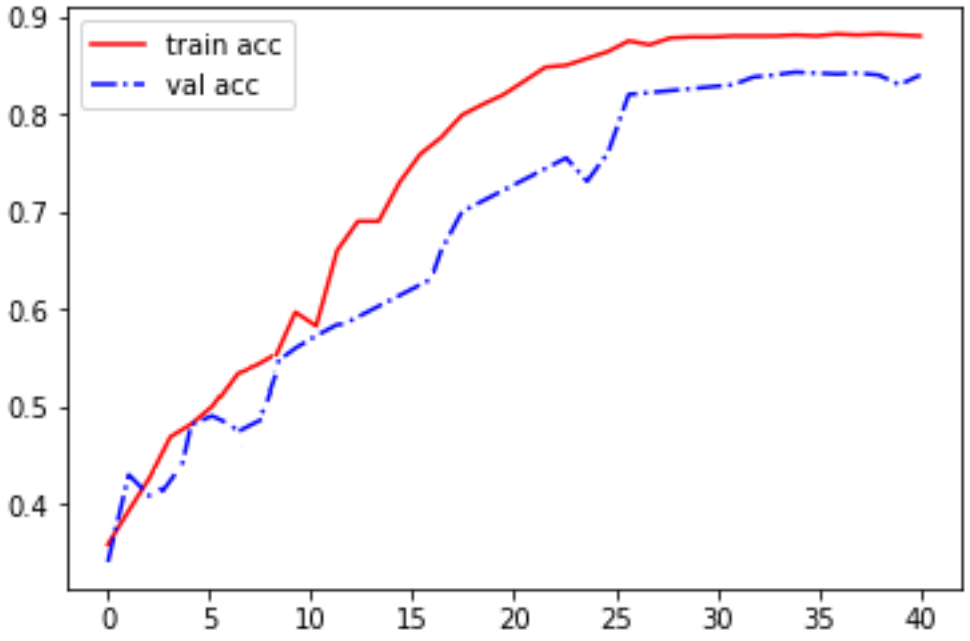

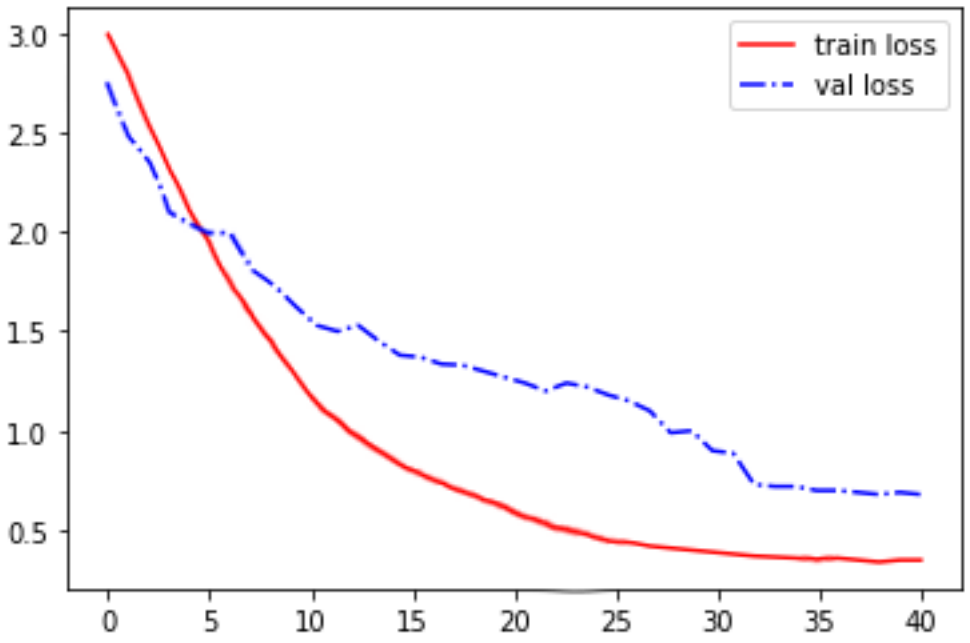

Experiment Result

Accuracy on Validation Set:
Comparison Test 1: 0.713
Comparison Test 2: 0.748 (Style Augmentation)
Comparison Test 3: 0.809 (Traditional Augmentation)
Comparison Test 4: 0.842 (Traditional & Style Augmentation)

OUTLINE

This presentation is divided into 10 sections:

1. Challenge Statement
2. Problem Statement
3. BASIC IDEA: A First Look
4. BACKGROUND: Style Transfer
5. PROPOSED APPROACH: Style Transfer Pipeline
6. PROPOSED APPROACH: Randomization Procedure
7. Experiment Design
8. Experiment Result
9. Result Analysis ☜
10. References

Result Analysis

Style Augmentation can help diminish overfitting problem, and when combined with traditional augmentation methods, the overfitting problem is best solved.

OUTLINE

This presentation is divided into 10 sections:

1. Challenge Statement
2. Problem Statement
3. BASIC IDEA: A First Look
4. BACKGROUND: Style Transfer
5. PROPOSED APPROACH: Style Transfer Pipeline
6. PROPOSED APPROACH: Randomization Procedure
7. Experiment Design
8. Experiment Result
9. Result Analysis
10. References ☜

REFERENCES

[1] Lin, Tsung-Yi, et al. "Microsoft coco: Common objects in context." European conference on computer vision. Springer, Cham, 2014.[2] Kingma, Diederik P., and Max Welling. "Auto-encoding variational bayes." *arXiv preprint arXiv:1312.6114* (2013).

[2] Shorten, Connor, and Taghi M. Khoshgoftaar. "A survey on image data augmentation for deep learning." Journal of big data 6.1 (2019): 1-48.

[3] Jackson, Philip TG, et al. "Style augmentation: data augmentation via style randomization." CVPR Workshops. Vol. 6. 2019.

[4] Gatys, Leon A., Alexander S. Ecker, and Matthias Bethge. "Image style transfer using convolutional neural networks." Proceedings of the IEEE conference on computer vision and pattern recognition. 2016.

[5] Dumoulin, Vincent, Jonathon Shlens, and Manjunath Kudlur. "A learned representation for artistic style." arXiv preprint arXiv:1610.07629 (2016).

[6] Ghiasi, Golnaz, et al. "Exploring the structure of a real-time, arbitrary neural artistic stylization network." arXiv preprint arXiv:1705.06830 (2017).

THANK YOU!

XU Chentianye · 24 Apr, 2022